MALE END VIEW	FEMALE END VIEW (J1,J2)	WIRING DIAGRAM
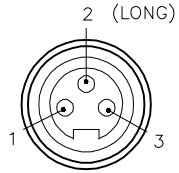	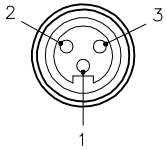	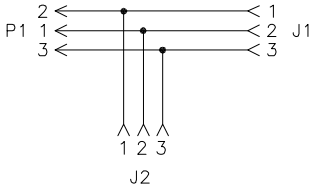

SPECIFICATIONS

CONTACT CARRIER MATERIAL	PVC
MOLDED MATERIAL/COLOR	PVC/BLACK
CONTACT MATERIAL/PLATING	BRASS or COPPER/GOLD
COUPLING NUT MATERIAL/PLATING	ALUMINUM/CLEAR-ANODIZED (P1), BRASS/NICKEL (J1,J2)
RATED CURRENT [A]	30 A COMBINED, 15 A (J1, J2)
RATED VOLTAGE [V]	600 V
TEMPERATURE RATING	-40°C to +90°C (-40°F to +194°F)
PROTECTION CLASS	MEETS NEMA 1,3,4,6P AND IEC IP67

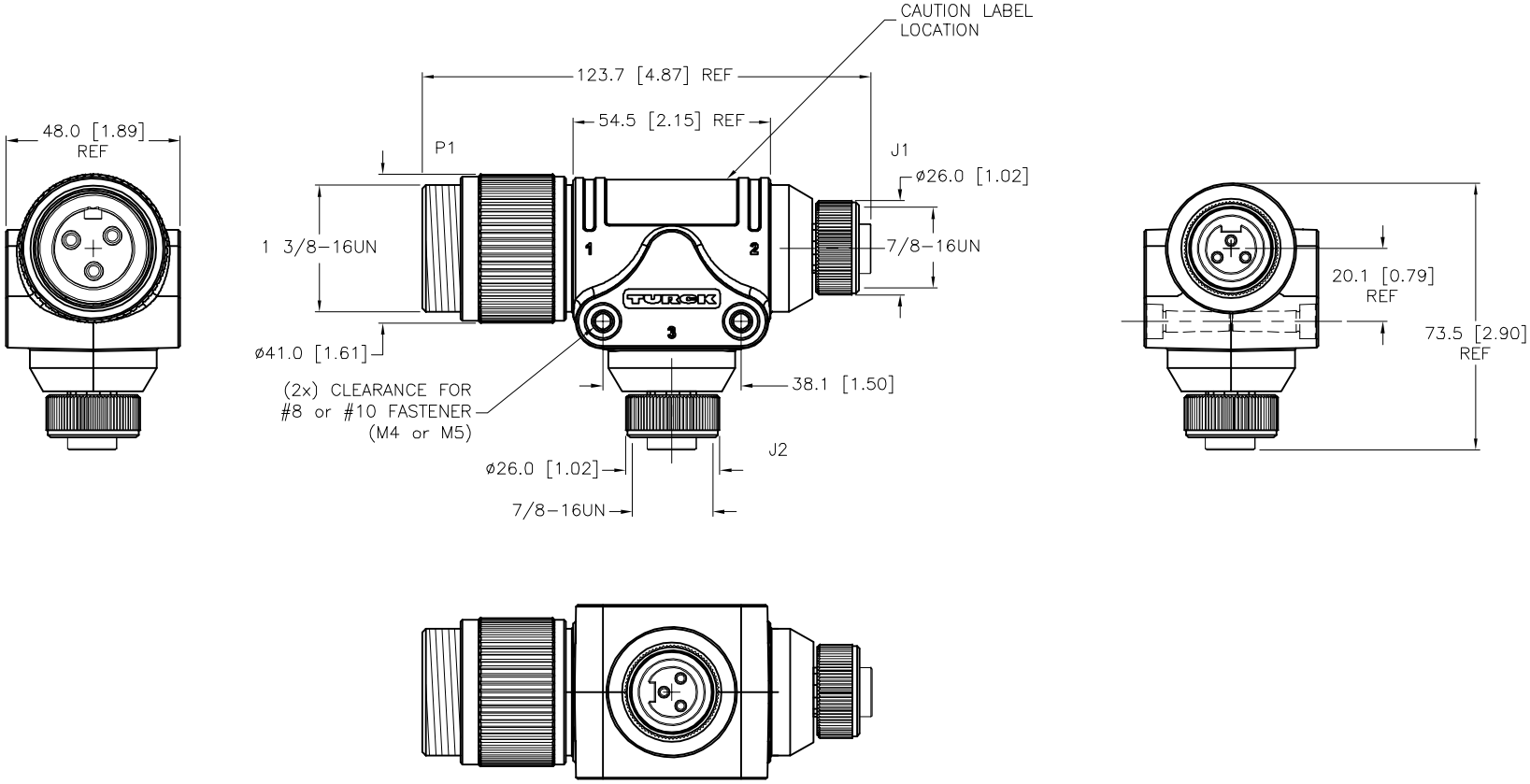

SOURCE DRAWING - FOR REFERENCE ONLY

CAUTION:
RISK OF ELECTRICAL SHOCK
DO NOT DISCONNECT UNDER LOAD

REV	DESCRIPTION	BY	DATE	ECO NO.
B	UPDATE WIRING	NF	02/24/23	500000007902

RELATED DOCUMENTS
1.
2.
3.
4.

3RD ANGLE PROJECTION

THIS DRAWING IS CONFIDENTIAL AND THE PROPERTY OF TURCK INC. USE OF THIS DOCUMENT WITHOUT WRITTEN PERMISSION IS PROHIBITED.

TURCK

3000 CAMPUS DRIVE
MINNEAPOLIS, MN 55441
1-800-544-7769
(763) 553-7300
(763) 553-0708 fax
www.turck.us

MATERIAL: SEE SPECIFICATIONS

FINISH: SEE SPECIFICATIONS

ALL DIMENSIONS DISPLAYED ON THIS DRAWING ARE FOR REFERENCE ONLY

CONTACT TURCK FOR MORE INFORMATION

DRFT: TV | DATE: 04/15/16
APVD: L.H. | SCALE: 1=2.0

UNIT OF MEASUREMENT
MILLIMETER [INCH]
DO NOT SCALE THIS DRAWING

DESCRIPTION: GSDA/2RKM 34

IDENTIFICATION NO.: U2-26949 | REV: B

FILE: U2-26949 | SHEET 1 OF 1

Approved 02/24/2023, work order #267038 by D.R.